INSTALLATION INSTRUCTIONS
POLARIS RANGER XP900
REAR VENT WINDSHIELD
PART # 77-9600V-R

IMPORTANT NOTICES

READ AND UNDERSTAND THESE INSTRUCTIONS COMPLETELY BEFORE INSTALLATION TO AVOID INJURY TO YOURSELF, DAMAGE TO THE VEHICLE OR ACCESSORY.

- **For proper installation, TWO people are required.**
- **Torque specifications must be followed when tightening bolts. Over-tightening any and/or all screws will cause cracks around mounting holes which is not covered by any warranty.**
- **As specified on carton label, once protective film on shields is removed, product cannot be returned.**
- **As specified on carton label, damage caused by packaging staples is not covered by warranty. All staples must be removed prior to removing product from carton.**
- **Failure to follow these installation instructions completely may void any warrantable components and result in product damage or personal injury.**
- **Do not use Loctite or any other similar fastener adhesive. These types of products react to plastics and cause cracking. Not covered by any warranty.**
- **Our windshields are made from the highest quality material providing optimum transparency and clarity. Blurriness and/or extrusion marks may or may not appear when looking through windshield from a wide, side-angle. This is normal for all extruded clear plastic materials.**
- **The application of improper cleaners, abrasive and/or dirty cleaning towels can severely damage the product. Failure to follow cleaning recommendation (provided herewith) may void any warrantable components.**

DEALER

These instructions contain important information for future reference and must be given to the customer at time of purchase or upon completion of installation.

Parts List (parts available with kit only and not available separately)

ITEM		PART NAME	DESCRIPTION	QTY
A		Windshield	CNC windshield cut-out made of ⅛" thick GE FMR polycarbonate or equivalent	1
B		Vent grill (#T5)	CNC vent grill cut-out made of $^{3}/_{16}$" tint polycarbonate	1
INSTRUCTION BAG	C	Co-extruded **SIDE** bulb seal (¼")	Includes: 33" Co-extruded **SIDE** bulb seal (¼") / #77-95BS-SIDE **[end user to cut to exact length]**	1
	D	Foam cushion	Included: 108" of 1" x 1/16" self-adhesive foam cushion **[end user to cut to exact length]**	1
	E	Mounting hardware	Includes: 2 Philips truss screws M6 x 20, 2 flanged locknuts M6, 2 plastic washers M6, 2 plastic shoulder washers M6 and 2 push type retainers $^{5}/_{16}$"	1
	F	Vent hardware	Includes: 2 carriage bolts M6 x 30, 2 thin plastic washers, 4 plastic washers M6, 2 rubber washers M6 and 2 female thread knobs M6	1

1. Installation

a) Find a clean flat area where you can safely lay down the rear windshield (Item A). Partially remove the protective film and apply the self-adhesive foam cushion (Item D) to the windshield upper and lower surfaces as shown beside using manual pressure to ensure good adhesion to the windshield and cut any excess.

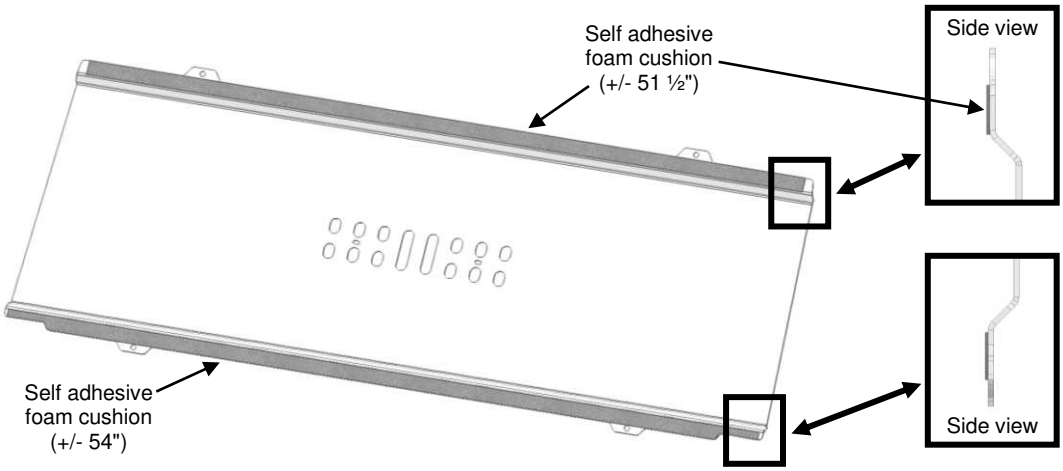

IMPORTANT NOTICES

Over-tightening any and/or all screws will cause cracks around mounting holes which is not covered by any warranty.

b) Partially remove the protective film on both sides and apply the co-extruded **SIDE** bulb seal (Item C) to both windshield side edges as shown below using manual pressure to ensure good adhesion and cut any excess.

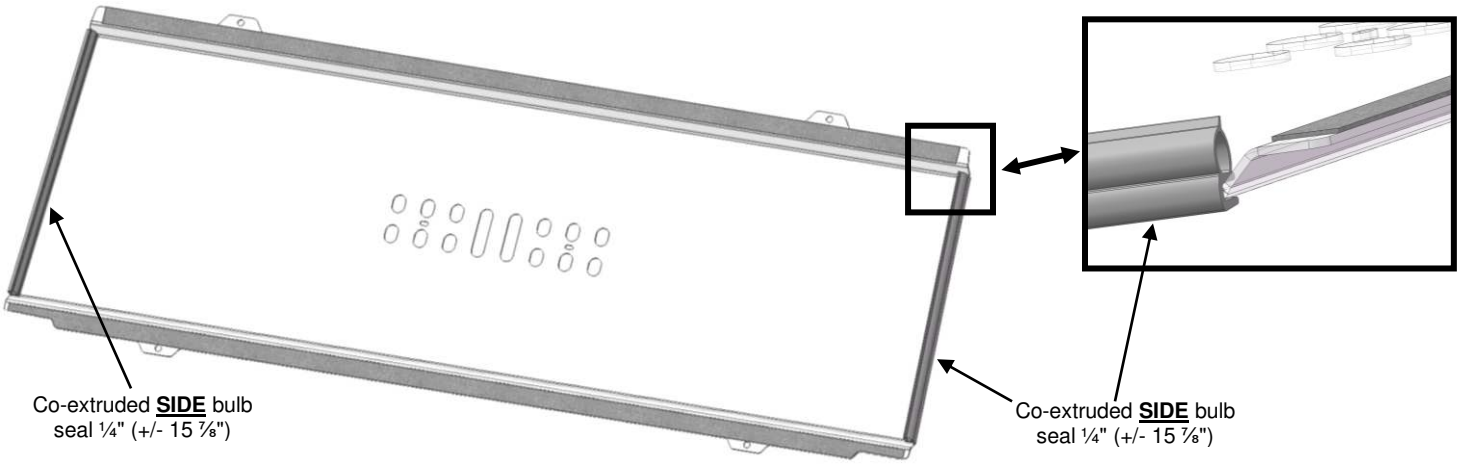

c) As per drawing, install the vent grill (Item B) on the interior side of the windshield as shown below using supplied hardware (Item F).

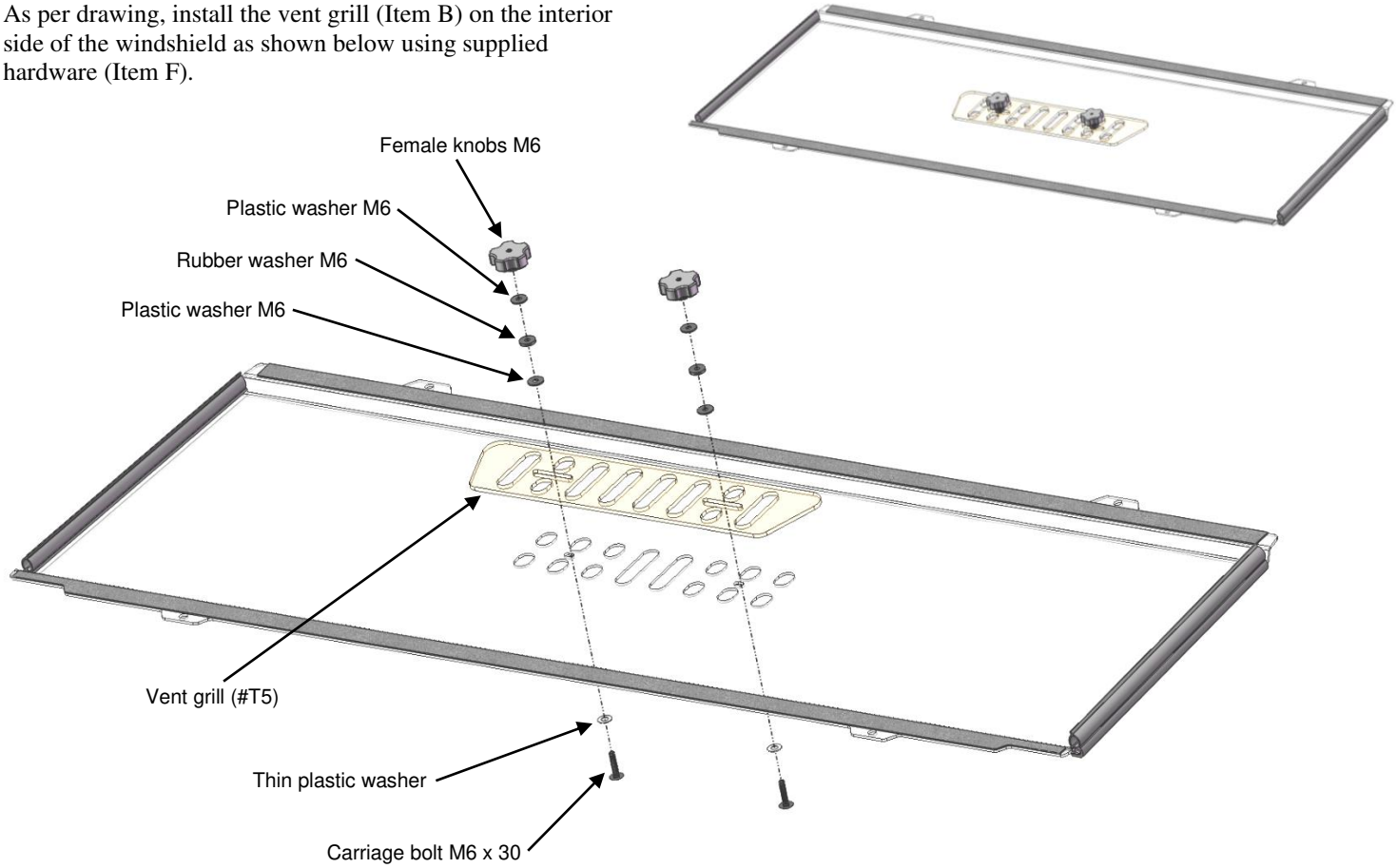

IMPORTANT NOTICES

Torque specifications must be followed when tightening bolts.
Over-tightening any and/or all screws will cause cracks around mounting holes which is not covered by any warranty.

d) Attach the windshield to the vehicle using supplied hardware as shown below. Adjust position and tighten all hardware. **(The seat backrest might have to be temporarily removed to access all the rear windshield mounting points.)**
Caution: over tightening any hardware could cause irreversible damage to the windshield.

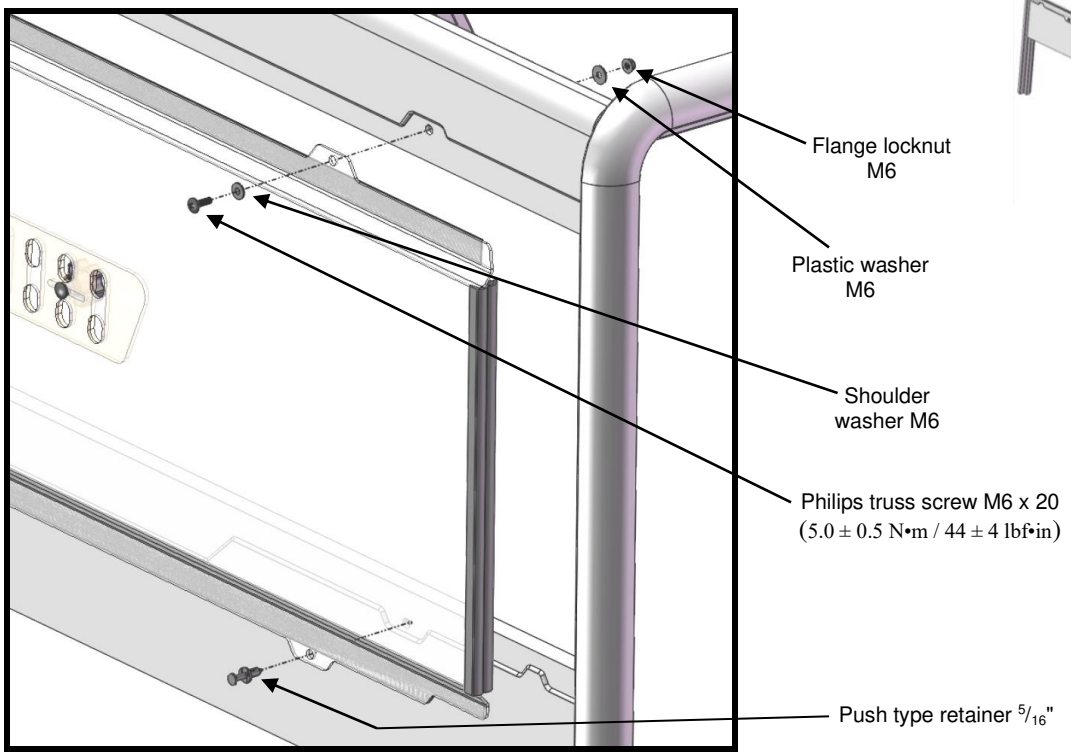

IMPORTANT NOTICES

Trailerable ONLY with a FULL Front windshield AND Roof - or damage can occur!
Due to extreme wind turbulence, towing on an open trailer pulled by a motor home, bus or other large size vehicle at highway speeds is NOT recommended.

CAUTION

Limited Towing at lower speeds (60mph or less) for shorter distances is acceptable with a FULL Front Windshield AND Roof ONLY. Prolonged towing at highway speeds on an Open trailer is NOT recommended and can cause damage that is NOT covered under Warranty. Whenever towing anytime, it is mandatory to check all windshield hardware BEFORE towing and at frequent intervals afterwards!
SPIKE suggests removal of Rear Windshields if towed in any conditions that are NOT recommended - removal will also create less drag on the tow vehicle

2. Maintenance and Care

Tighten all hardware after first use and periodically thereafter.

CLEANING:

- **Rinse with lukewarm water; wash gently with mild soap or detergent and lukewarm water, using a soft cloth or sponge. DO NOT SCRUB or use brushes or squeegees.**
- **Rinse again. Dry with soft cloth or moist cellulose sponge to prevent water spotting.**
- **To remove wet paint, glazing compound or grease, rub lightly with a good grade of VM&P naphtha or isopropyl alcohol, then wash and rinse. DO NOT USE GASOLINE.**

NOTICE: Abusive cleaning procedures by hand washing or automated washing equipment will eventually result in visual hazing, loss of light transmission and coating delamination.

Compatible Cleaning Agents

- **Aqueous Solution of Soaps and Detergents**

Fantastik	Joy	Formula 409	Mr. Clean	Top Job	VM&P grade Naphtha	Hexcel, F.O. 554	Neleco-Placer