INSTALLATION INSTRUCTIONS
POLARIS RANGER 2015 (MID-SIZE)
REAR WINDSHIELD
PART # 77-5501-R

IMPORTANT NOTICES

READ AND UNDERSTAND THESE INSTRUCTIONS COMPLETELY BEFORE INSTALLATION TO AVOID INJURY TO YOURSELF, DAMAGE TO THE VEHICLE OR ACCESSORY.

- **For proper installation, TWO people are required.**
- **Torque specifications must be followed when tightening bolts. Over-tightening any and/or all screws will cause cracks around mounting holes which is not covered by any warranty.**
- **As specified on carton label, once protective film on shields is removed, product cannot be returned.**
- **As specified on carton label, damage caused by packaging staples is not covered by warranty. All staples must be removed prior to removing product from carton.**
- **Failure to follow these installation instructions completely may void any warrantable components and result in product damage or personal injury.**
- **Do not use Loctite or any other similar fastener adhesive. These types of products react to plastics and cause cracking. Not covered by any warranty.**
- **Our windshields are made from the highest quality material providing optimum transparency and clarity. Blurriness and/or extrusion marks may or may not appear when looking through windshield from a wide, side-angle. This is normal for all extruded clear plastic materials.**
- **The application of improper cleaners, abrasive and/or dirty cleaning towels can severely damage the product. Failure to follow cleaning recommendation (provided herewith) may void any warrantable components.**

DEALER

These instructions contain important information for future reference and must be given to the customer at time of purchase or upon completion of installation.

Parts List (parts available with kit only and not available separately)

ITEM		PART NAME	DESCRIPTION	QTY
A		Rear windshield	CNC windshield cut-out made of ⅛" thick GE polycarbonate or equivalent	1
B		Rear bracket	CNC bracket cut-out made of ⅛" thick GE polycarbonate or equivalent	1
INSTRUCTION BAG	C	Foam cushion	Included: 90" of 1" x ⅛" self adhesive foam cushion **[end user to cut to exact length]**	1
	D	Mounting hardware	Includes: 7 Philips truss screw M6 x 20, 14 plastic shoulder washers M6 and 7 flanged locknuts M6	1

1. Installation

a) Find a clean flat area where you can safely lay down the rear windshield (Item A) and the rear bracket (Item B). Partially remove the protective film and apply the self-adhesive foam cushion (Item C) using manual pressure to ensure good adhesion to the windshield and cut any excess.

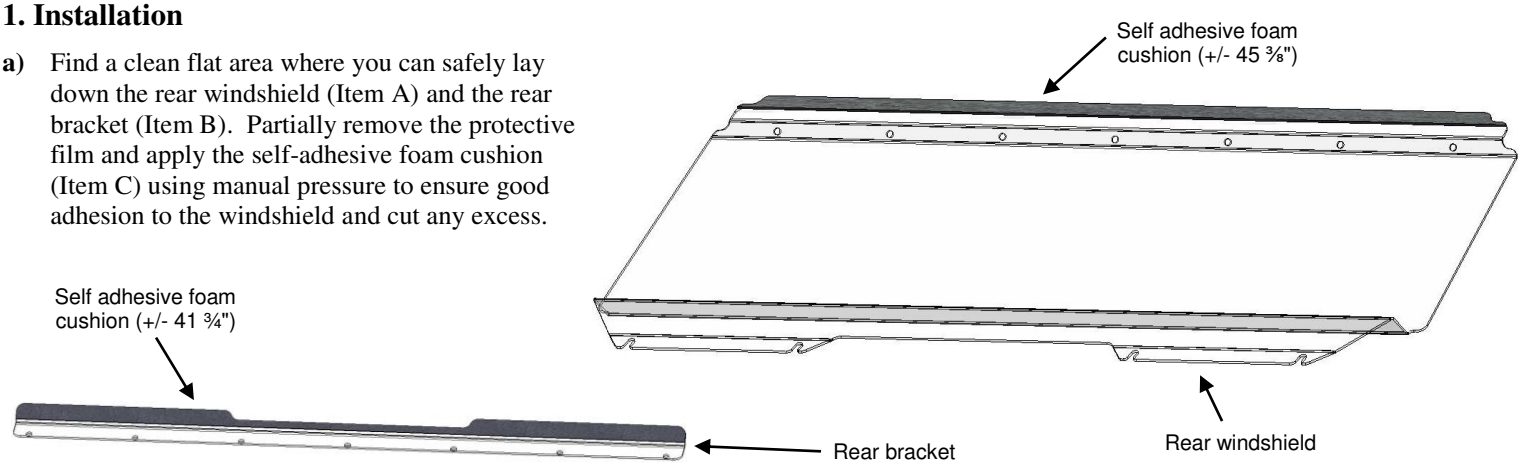

IMPORTANT NOTICES

Over-tightening any and/or all screws will cause cracks around mounting holes which is not covered by any warranty.

b) Loosen the 4 OEM screws that hold the top portion of the backrest without removing them completely. Partially remove the protective film on both sides and slide the lower portion of the rear windshield between the roll cage structure and the backrest as shown. **Do not tighten at this stage; you will need to make adjustments later on.**

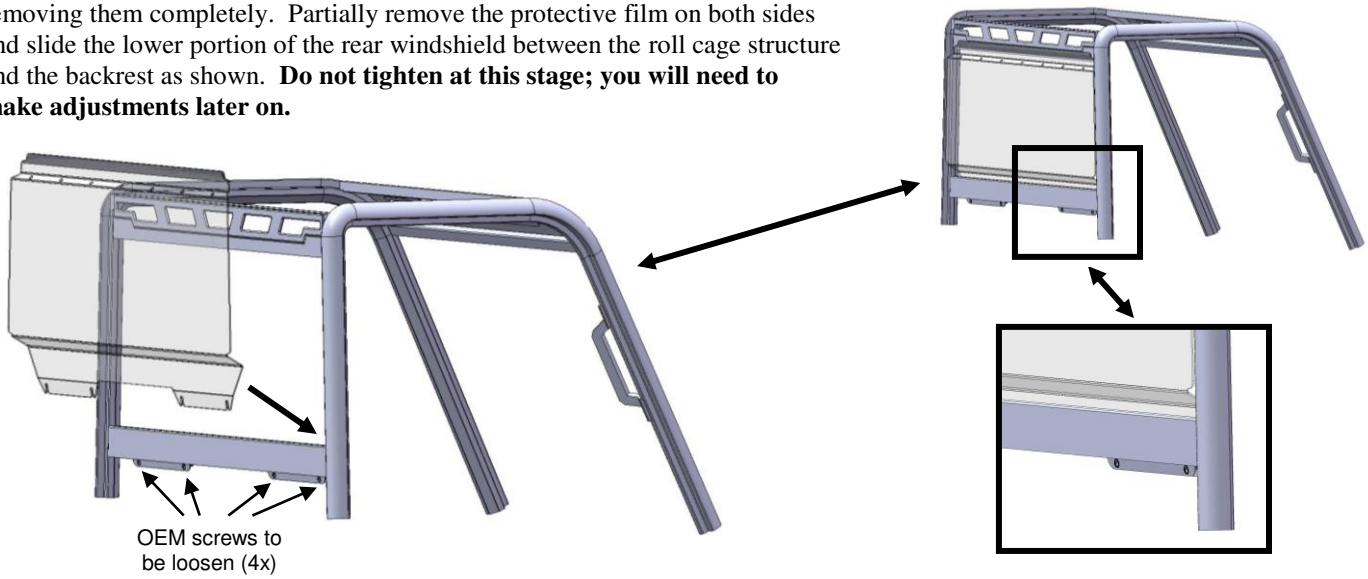

c) Partially remove the protective film on both sides and attach the rear bracket to the rear windshield using supplied hardware (Item D) as shown below. Adjust the position of the windshield and tighten all screws and nuts.

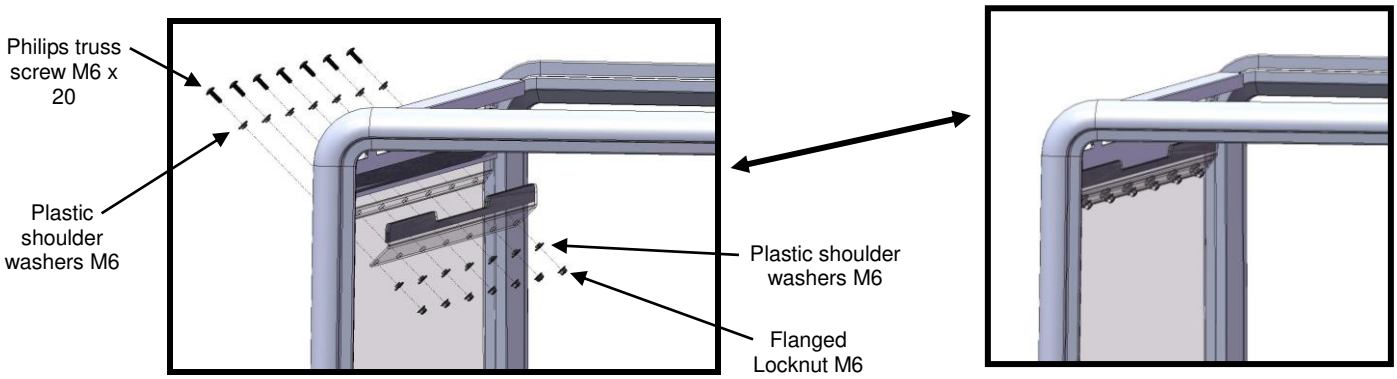

2. Maintenance and Care

Tighten all hardware after first use and periodically thereafter.

CLEANING:

- **Rinse with lukewarm water; wash gently with mild soap or detergent and lukewarm water, using a soft cloth or sponge. DO NOT SCRUB or use brushes or squeegees.**
- **Rinse again. Dry with soft cloth or moist cellulose sponge to prevent water spotting.**
- **To remove wet paint, glazing compound or grease, rub lightly with a good grade of VM&P naphtha or isopropyl alcohol, then wash and rinse. DO NOT USE GASOLINE.**

NOTICE: Abusive cleaning procedures by hand washing or automated washing equipment will eventually result in visual hazing, loss of light transmission and coating delamination.

Compatible Cleaning Agents

- **Aqueous Solution of Soaps and Detergents**

Joy	Freon T.F.	Palmolive liquid	Top Job	VM&P grade Naphtha	Windex (with ammonia D)

MINIMIZING HAIRLINE SCRATCHES

For minimizing scratches and minor abrasions, mild automobile polish can be used.
Recommended products: Johnson Paste Wax, Novus Plastic Polish #1 and #2, Mirror Glaze plastic polish and Plexux1.
Testing polish on a separate Lexan sample is recommended. Be sure to follow product instructions carefully.